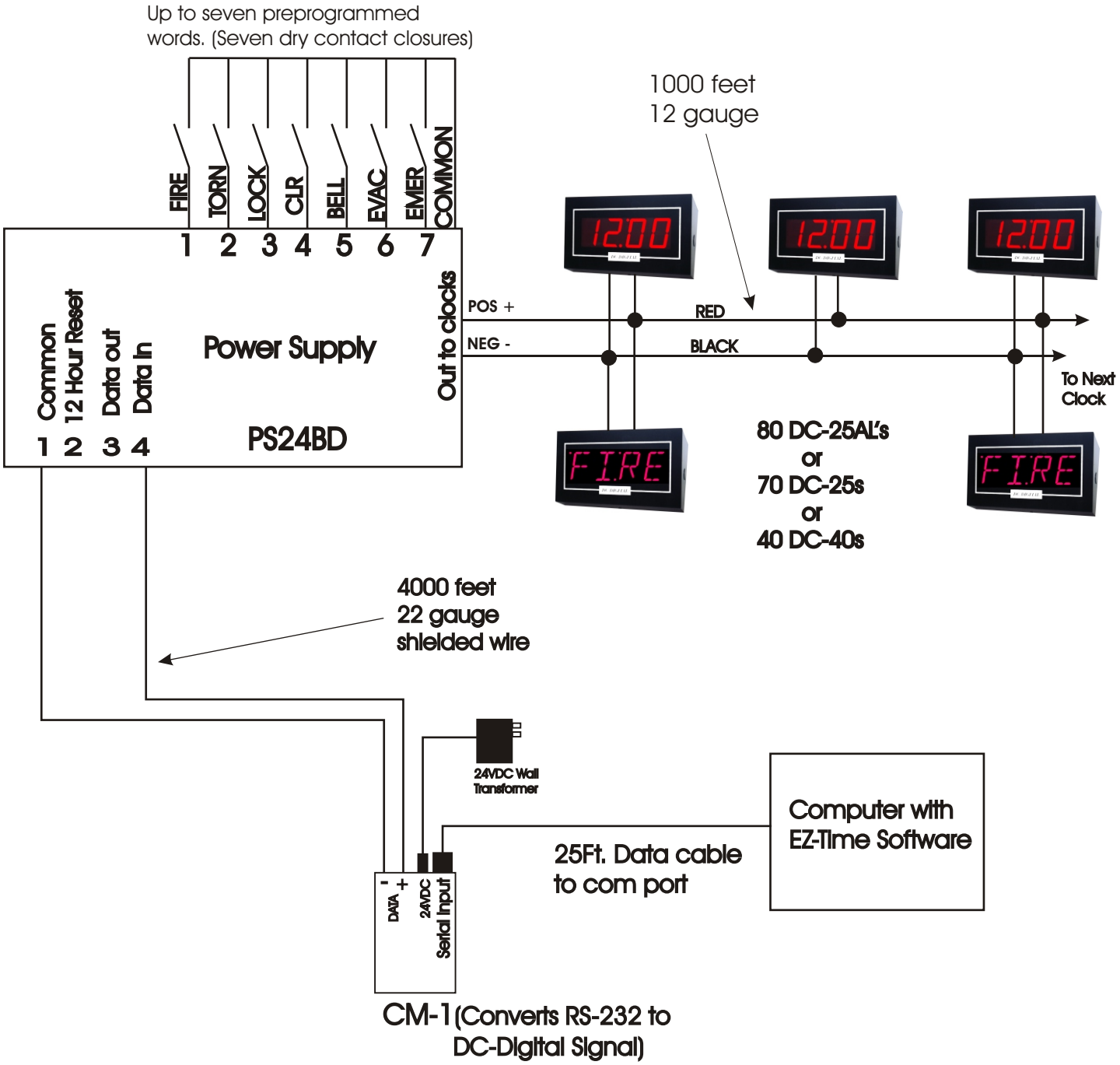Two-Wire DC-Digital Clocks
Using PS24BD