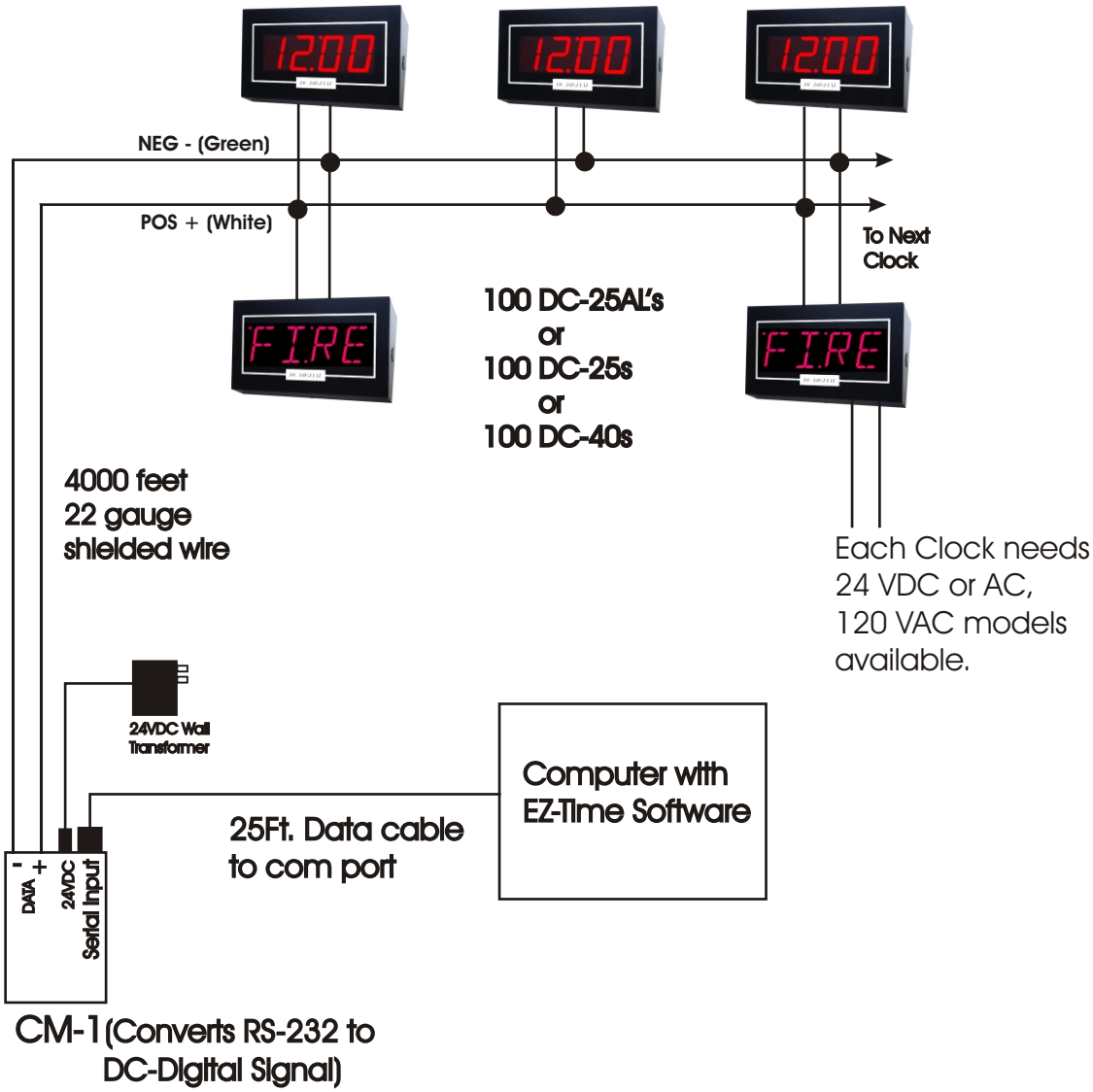Two-Wire DC-Digital Clocks
Using a Separate Power Source