Double-Faced Hall Mount

DO-25

DC-Digital™ Clocks

The True Two Wire System

Features

- Simple installation
- No visible mounting screws
- Wall and ceiling mount
- Leveling screws
- No junction box required
- 1/2" knock-outs located on all sides
- Bi-directional viewing
- Fits on a 2"x4" or 4"x4" junction box

Specifications

- Case — Steel 14 gauge; 7.125"W x 6.25"H x 4.625"D
- Weight — 3.6 pounds
- Case Finish — Black powder coating
- Options — Use as a ceiling mount or a wall mount

Double-Faced Hall Mount Description

The DO-25 is designed for the installation of two DC-Digital clocks. The DO-25 is designed for bi-directional viewing in areas such as corridors, lobbies, and large areas where two clocks are necessary for clear clock viewing. Clocks are not included with the purchase of the DO-25.

Copyright Industrial Electronic Service, Ltd. 2000 • 325 Industry Drive, Carlisle, Ohio • 937-746-9750 • Fax 937-746-9704

DC-Digital DO-25 Double-Faced Hall Mount Dimensions

Top View

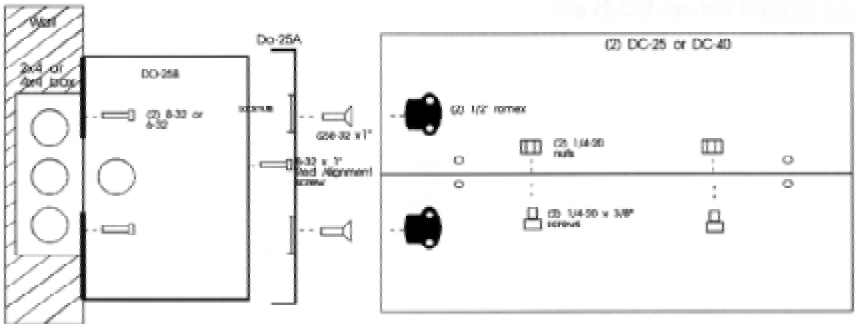

Front View

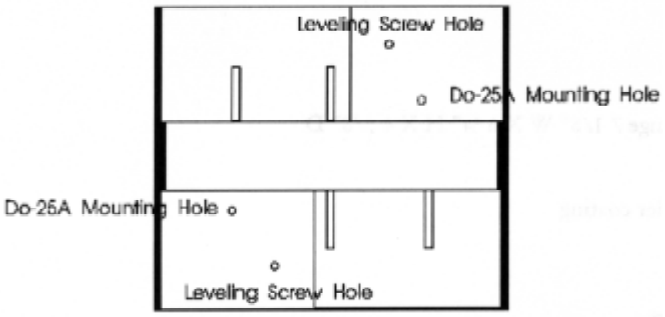

Back View

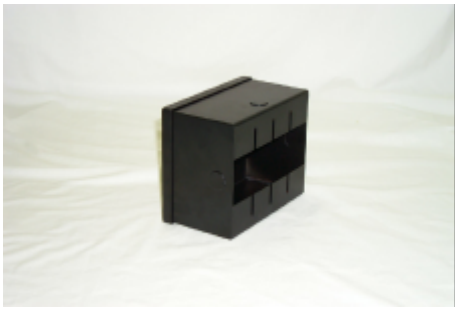

1) Install the DO-25B* to a 4"x4", 2"x4"junction box or directly to the wall. Use the # 8/32 or #6/32 screws provided for mounting to the existing 4"x4" or 2"x4" junction boxes.

2) Install the Red leveling #8/32 screw to the DO-25B*. (This screw is used if the wall is not plumb)

3) Pull the control wires through the DO-25A+ and attach the DO-25A+ to the DO-25B* using #8/32 tapered screws.

4) Join the (2) DC-25 or DC-40 Digital Clocks together backs only, at this time using 1/4"-20x1/2" screws and nuts. Use opposing mounting holes for the best results. Use one of the black 1"1/4 insulator and install the insulator through both clocks' center holes.

5) Install the joined DC-25 or DC-40 backs to the DO-25A+ using 3/8" romex connectors. Remove joined digital clocks and level them, if desired. Make the proper connections to the cabling from the power supply and assemble the clock faces to the clock backs.

Note: DO-25B* back box/ DO-25+ front cover

Copyright Industrial Electronic Service, Ltd. 2000 • 325 Industry Drive, Carlisle, Ohio • 937-746-9750 • Fax 937-746-9704